Fax Orders: 248-442-8327

Phone Orders: 1.800.Angelo.2 (1.800.264.3562)

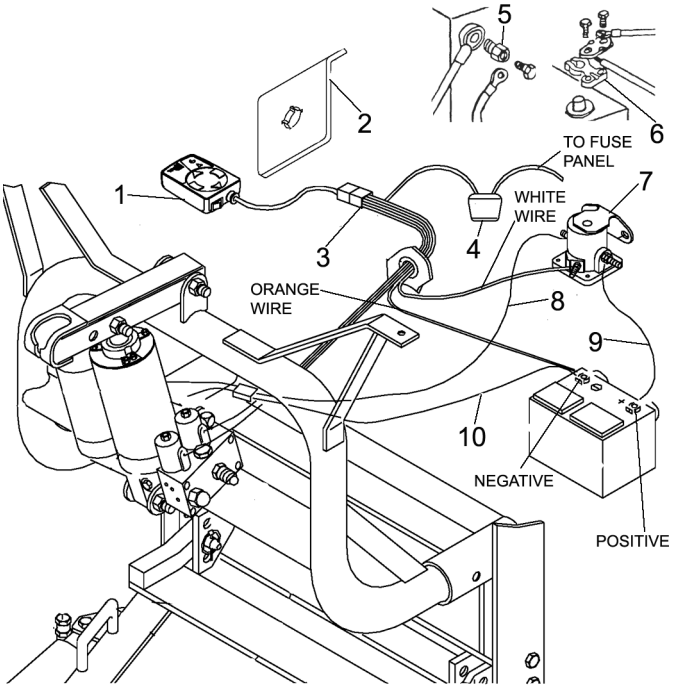

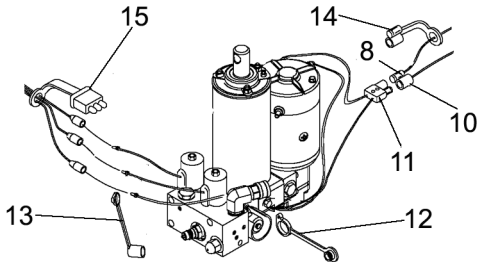

E-57 TOUCH PAD CONTROL & WIRING

LOC. NO.	PART NUMBER	DESCRIPTION	MSRP	SALE PRICE
1	Z100706	TOUCH PAD, SAM	$129.94	**$99.95**
	Z422690	OEM PISTOL GRIP CONTROL	$333.39	**$229.95**
	Z105960	UNIVERSAL CONTROLLER MEYER/DIAMOND	$246.94	**$189.95**
2	Z415673	OEM BRACKET, TOUCH PAD	$3.19	**$1.95**
3	Z415764	OEM HARNESS, TOUCH PAD	$85.09	**$57.95**
4	Z101228	FUSE, 10A, ATC	$1.24	**$.95**
5	Z100030	ADAPTOR, SIDE POST	$3.19	**$2.45**
6	Z100507	BATTERY TERMINAL	$2.59	**$1.99**
7	Z100133	SOLENOID	$7.74	**$5.95**
	Z415370	OEM SOLENOID	$27.89	**$18.95**
8	Z100764	CABLE, 63” RED	$20.74	**$15.95**
	Z415671	OEM CABLE, 63” RED	$27.89	**$18.95**
9	Z100640	CABLE, 36” RED	$10.99	**$7.45**
	Z405024	OEM CABLE, 36” RED	$12.29	**$8.45**
10	Z100765	CABLE, 42” BLACK	$18.14	**$12.95**
	Z415672	OEM CABLE, 42” BLACK	$20.09	**$13.95**
11	Z100809	PIGTAIL ASSY., 2 TERMINAL GROUND	$25.94	**$19.95**
	Z415811	OEM PIGTAIL ASSY., 2 TERMINAL GROUND	$43.49	**$28.95**
12	Z422326	OEM WEATHER PLUG	$7.09	**$3.95**
13	Z422325	OEM WEATHER PLUG	$7.09	**$3.95**
14	Z436248	OEM WEATHER PLUG	$4.49	**$2.95**
15	Z415669	OEM WEATHER PLUG	$12.29	**$7.95**

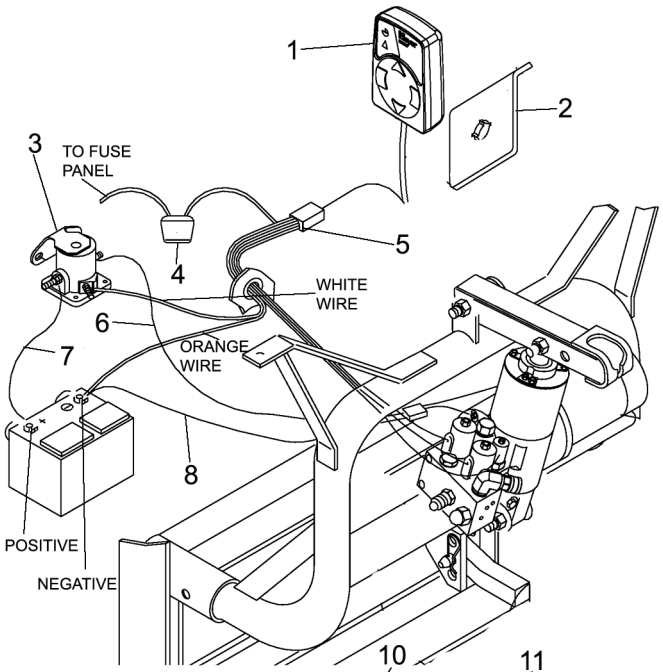

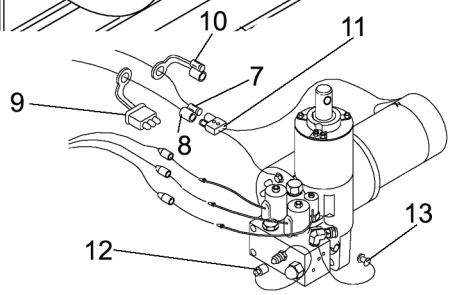

E-60 TOUCH PAD CONTROL & WIRING

LOC. NO.	PART NUMBER	DESCRIPTION	MSRP	SALE PRICE
1	Z100706	TOUCH PAD, SAM	$129.94	**$99.95**
	Z422690	OEM PISTOL GRIP CONTROL	$333.39	**$229.95**
	Z105960	UNIVERSAL CONTROLLER MEYER/DIAMOND	$246.94	**$189.95**
2	Z415673	OEM BRACKET, TOUCH PAD	$3.19	**$1.95**
3	Z100133	SOLENOID	$7.74	**$5.95**
	Z415370	OEM SOLENOID	$27.89	**$18.95**
4	Z101228	FUSE, 10A, ATC	$1.24	**$.95**
5	Z415764	OEM HARNESS, TOUCH PAD	$85.09	**$57.95**
6	Z100764	CABLE, 63” RED	$20.74	**$15.95**
	Z415671	OEM CABLE, 63” RED	$27.89	**$18.95**
7	Z100640	CABLE, 36” RED	$10.99	**$7.45**
	Z405024	OEM CABLE, 36” RED	$12.29	**$8.45**
8	Z100765	CABLE, 42” BLACK	$18.14	**$12.95**
	Z415672	OEM CABLE, 42” BLACK	$20.09	**$13.95**
9	Z415669	OEM WEATHER PLUG	$12.29	**$7.95**
10	Z436248	OEM WEATHER PLUG	$4.49	**$2.95**
11	Z100809	PIGTAIL ASSY., 2 TERMINAL GROUND	$25.94	**$19.95**
	Z415811	OEM PIGTAIL ASSY., 2 TERMINAL GROUND	$43.49	**$19.95**
12	Z422325	OEM WEATHER PLUG	$7.09	**$3.95**
13	Z422326	OEM WEATHER PLUG	$7.09	**$3.95**

www.angelos-supplies-com

“When It Snows, It’s Angelo’s”

Trade names Meyer, Western, etc. used in this catalog are for reference purposes only. Angelo’s Supplies, Inc. does not imply that the products listed are produced by these manufacturers. Prices subject to change without notice. All sales are final on electrical items. All authorized returns are subject to a 15% restocking fee. All special order items must be prepaid and sales are final; no returns or exchanges will be permitted.